Beaverstate
DENTAL SYSTEMS

2 HP Automatic Control
A-2100 / A-2150

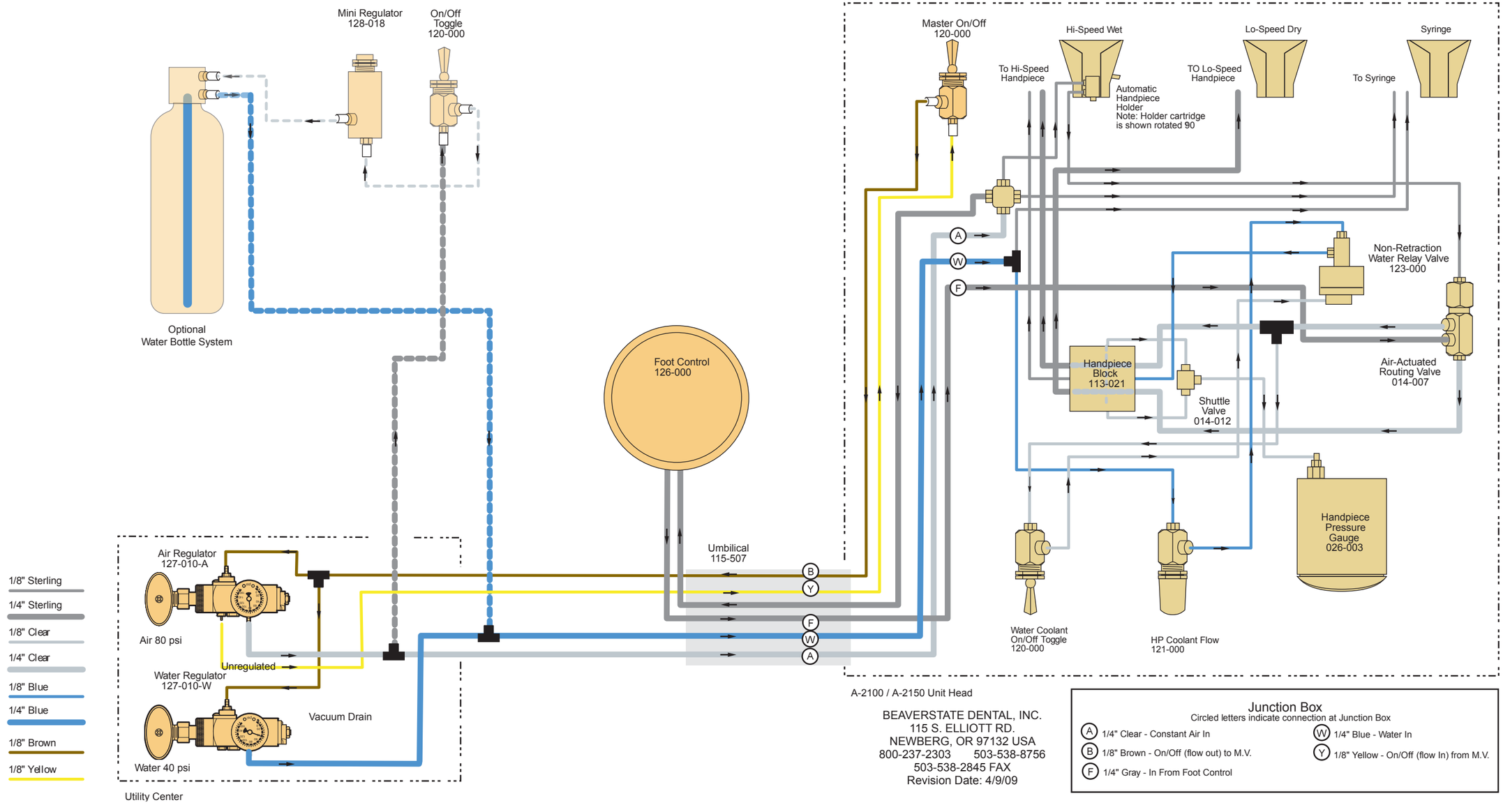

BEAVERSTATE DENTAL, INC.
115 S. ELLIOTT RD.
NEWBERG, OR 97132 USA
800-237-2303 503-538-8756
503-538-2845 FAX

Revision Date: 4/9/09

Junction Box

Circled letters indicate connection at Junction Box

- (A) 1/4" Clear - Constant Air In
- (B) 1/8" Brown - On/Off (flow out) to M.V.
- (F) 1/4" Gray - In From Foot Control
- (W) 1/4" Blue - Water In
- (Y) 1/8" Yellow - On/Off (flow In) from M.V.