BEAVERSTATE DENTAL SYSTEMS

Service Manual

A-5200

Telescoping Arm

System with Vacuum Package

Rev 3 - 6-19-19

900-014

A-5200

Installation

1. Place the shipping carton in the desired location. Remove the vacuum system with telescoping arm from the shipping carton.
2. Mount the post clamp to the post at the desired height.
3. Insert the rigid arm into the post clamp.
4. Place the HVE and S/E valves in their holders and connect the tubing to the ports on the vacuum cannister. Connect the drain and syringe tubing to the appropriate connections.
6. Place the syringe in its holder.

Final Adjustments

Check air pressure, adjust to 80 psi if necessary.
Check water pressure, adjust to 40 psi if necessary.
Check vacuum cannister for solids screen.
Test HVE and S/E valves for proper function.
Test syringe for proper pressure and function.

Operation

1. Insure that the central vacuum system is turned on and air and water pressure are at the proper setting.
2. Lift the vacuum valve out of the holder and push the lever down towards the base of the valve to allow vacuum to begin.

Cleaning

1. Separate valve from tubing at the quick disconnect swivel by pulling them apart. Remove the lever and the spool and clean in an ultrasonic cleaner.
2. Rinse thoroughly before putting components into autoclave.
3. Lubricate O-Rings on the spool only with a silicone based lubricant and reassemble.

Autoclavable HVE & S/E Valves

Maintenance

Autoclavable vacuum valves may be autoclaved by steam autoclave or a chemical vapor. Due to the tight clearances and hardness of the anodized surfaces, the valve spool can become jammed or seize in the valve if it is sterilized while contaminated with debris.

Valves can be quickly disassembled for cleaning.

1. Pry one side of the lever and flip it off of the valve. For saliva ejector valves, remove the tip also.

2. Push out the valve spool and clean all the disassembled parts in an ultrasonic cleaner daily. Rinse thoroughly before putting into autoclave.

3. Lubricate the O-Rings on the spool with a silicone based lubricant before reassembly.

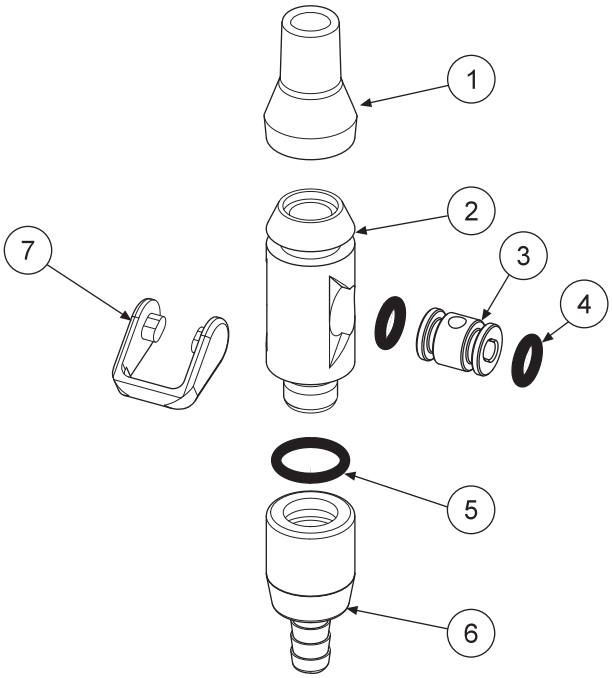

ITEM	PART DESCRIPTION	PART NUMBER	QTY
1	Tip	112-174	1
2	Body	112-276	1
3	Spool	112-278	1
4	O-Ring #10	017-110	2
5	O-Ring, #12	017-012	1
6	Swivel	112-177	1
7	Lever	112-181	1

AUTOCLAVABLE S/E LEVER VALVE, CHROME

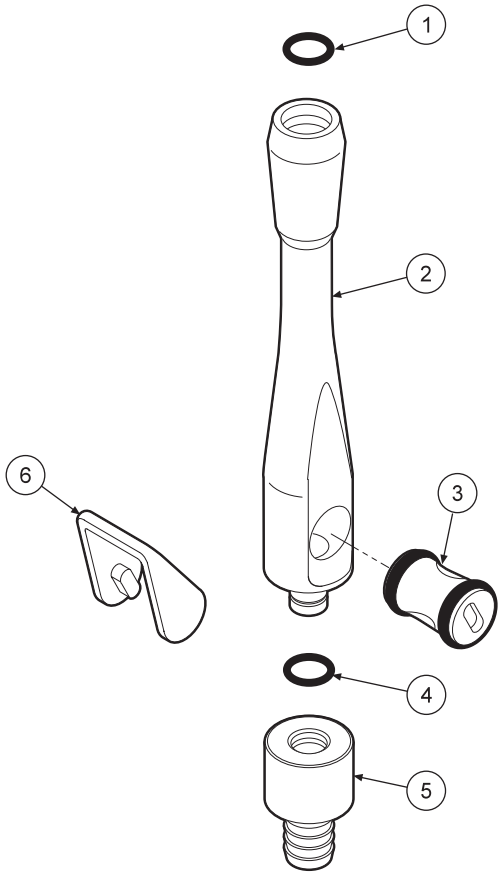

ITEM	PART DESCRIPTION	PART NUMBER	QTY
1	O-Ring, #13	017-113	3
2	Body, Chrome	112-272	1
3	Spool, Chrome	112-268	1
4	O-Ring, #13	017-013	1
5	Swivel	112-170	1
6	Lever	112-169	1

AUTOCLAVABLE UNIVERSAL HVE VALVE
112-263

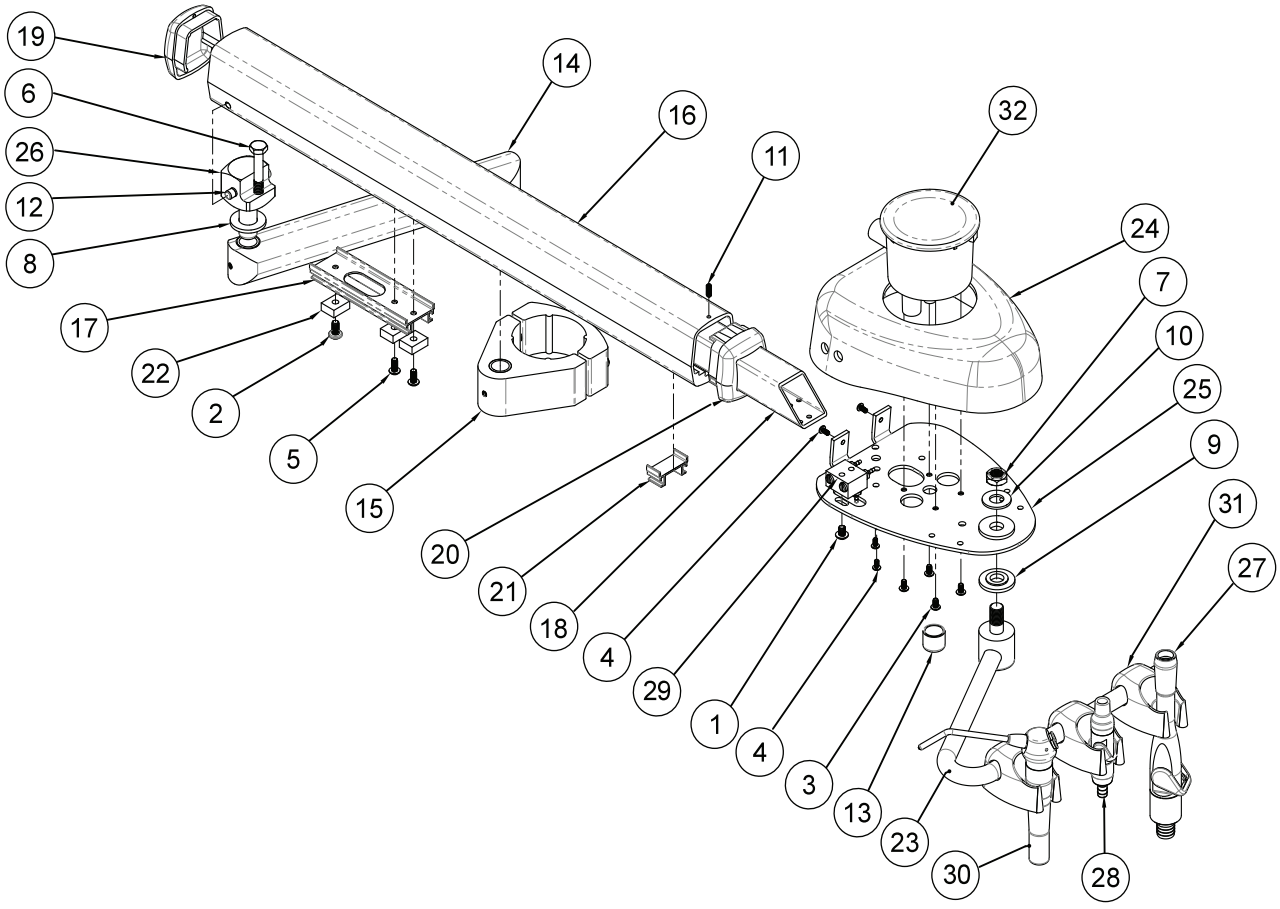

ITEM	PART DESCRIPTION	PART NUMBER	QTY
1	Screw, 10-32 x 1/4"	001-032	1
2	Screw, 10-32 x 3/8"	001-070	1
3	Screw, 6-32 x 1/4"	001-133	1
4	Screw, 8-32 x .25	001-149	2
5	Screw, 8-32 x .375	001-161	7
6	Carriage Bolt 1/4-20 x 1-3/4"	001-446	1
7	Lock Nut 3/8-24	002-002	1
8	Washer 1/2"	003-006	1
9	Washer Shoulder S-5325	003-013	10ft.
10	Washer 3/8"	003-025	1
11	Screw, 6-32 x 3/8"	005-018	1
12	Mechanical Flex Housing pin.	009-013	1
13	HVE Port Cap	010-009	1
14	8" Folding Arm Section	105-039	1
15	2" Post Mount Clamp	105-051	2
16	Telescoping Arm Slide Housing	105-212	1

ITEM	PART DESCRIPTION	PART NUMBER	QTY
17	Telescoping Arm Slide	105-214	1
18	Telescoping Arm Tube	105-216	3
19	Telescoping Arm End Cap	105-217	6
20	105-218 With Modified Tab	105-218	6
21	Telescoping Arm Front Slide Guide	105-219	2
22	Telescoping Arm Slider Block	105-220	1
23	7" Holder Bar Assembly	105-223	1
24	Vacuum Cover	105-230	1
25	Vacuum Chassi	105-232	1
26	Telescoping Arm Pivot	105-258	2
27	Universal HVE Valve	112-263	1
28	Autoclavable S/E Valve	112-280	1
29	Syringe Adustment Block	113-026	1
30	Syringe	113-400	1
31	Syringe Holder	141-100	3
32	Vacuum Canister	131-036	1

TELESCOPING ARM WITH VACUUM
A-5200

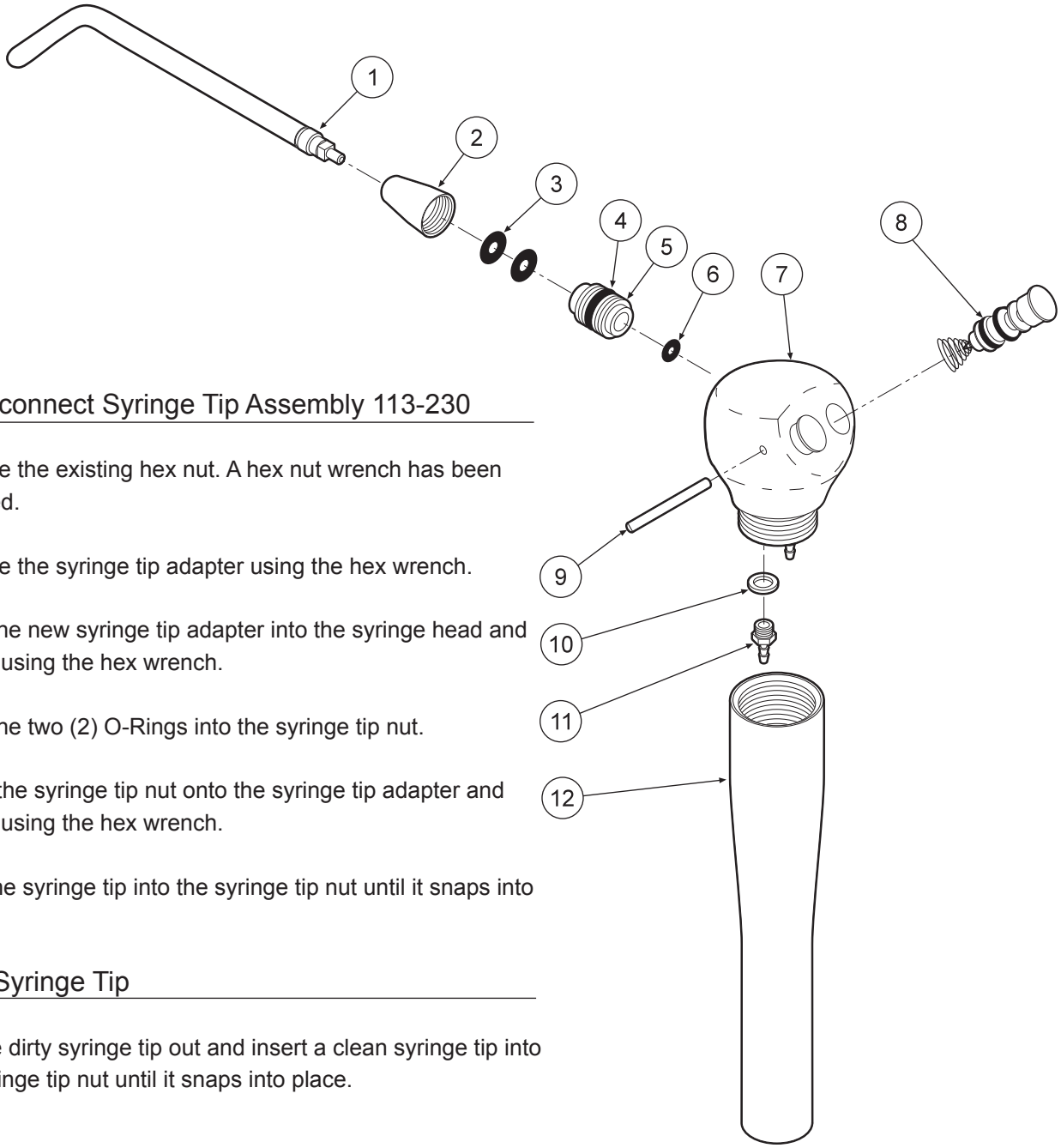

Quick-disconnect Syringe Tip Assembly 113-230

1. Remove the existing hex nut. A hex nut wrench has been provided.
2. Remove the syringe tip adapter using the hex wrench.
3. Insert the new syringe tip adapter into the syringe head and tighten using the hex wrench.
4. Place the two (2) O-Rings into the syringe tip nut.
5. Screw the syringe tip nut onto the syringe tip adapter and tighten using the hex wrench.
6. Push the syringe tip into the syringe tip nut until it snaps into place.

Replace Syringe Tip

1. Pull the dirty syringe tip out and insert a clean syringe tip into the syringe tip nut until it snaps into place.

ITEM	PART DESCRIPTION	PART NUMBER	QTY
1	Syringe Tip	113-030	1
2	Syringe Tip Nut	113-402	1
3	O-Ring, 006	017-006	2
4	O-Ring, 228-040	017-023	1
5	Syringe Tip Adapter	113-227	1
6	O-Ring, 003	017-003	1
7	Syringe Head	113-405	1
8	Syringe Button Repair Kit	113-403	2
9	Pin, Syringe Cartridge	113-008	1
10	Plastic Washer, 8-32	003-030	2
11	Barb, 8-32 x 1/16''	022-040	2
12	Syringe Handle	113-236	1

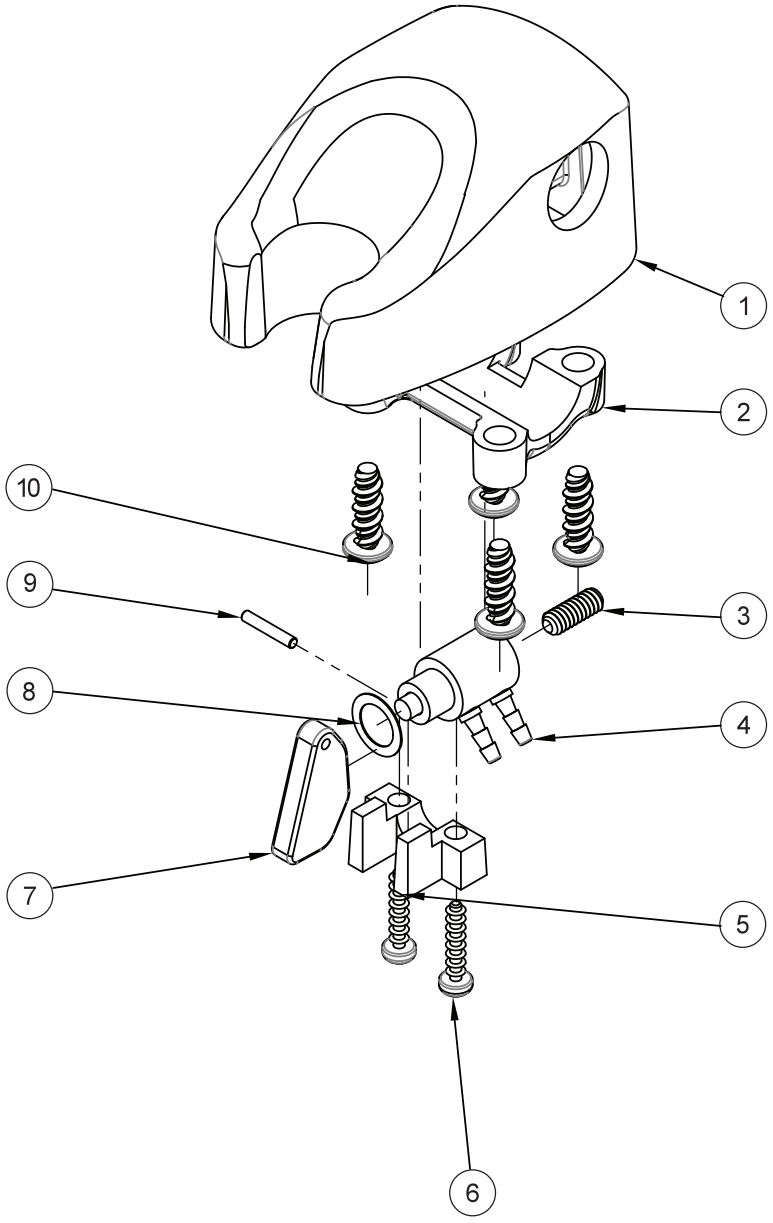

ITEM	PART DESCRIPTION	PART NUMBER	QTY
1	Molded Body	122-201	1
2	Clamp	122-104	1
3	Set Screw, 6-32 x 3/8"	005-012	1
4	Valve Cartridge	122-031	1
5	Molded Clip	122-102	1
6	Screw, 4 x 1/2"	001-019	2
7	Handpiece Actuator Lever	122-103	1
8	Washer	003-004	1
9	Pin, 1/16"x3/8" Dowel	009-010	1
10	Screw, 8-18 x 1/2"	001-267	4

MOLDED IC AUTOMATIC HOLDER
122-200

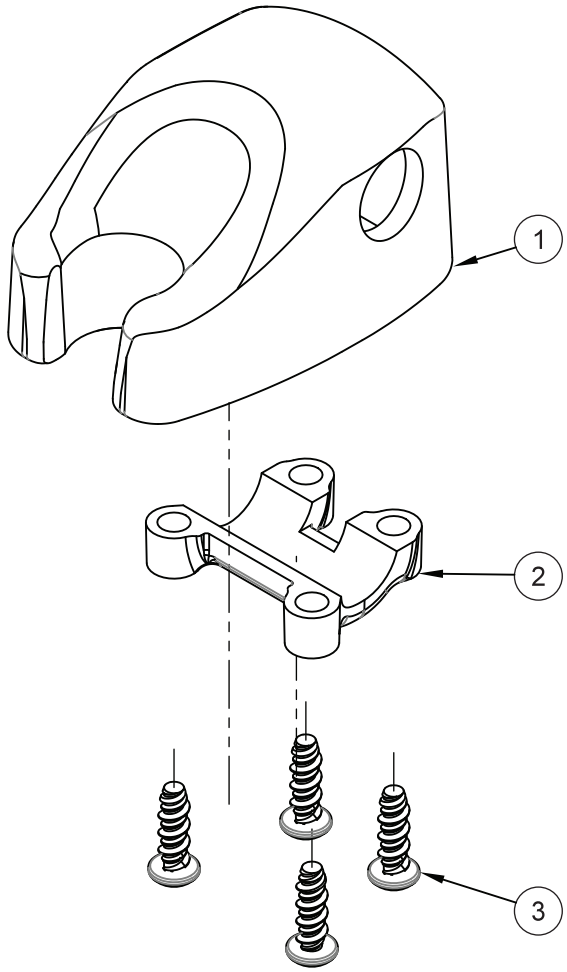

ITEM	PART DESCRIPTION	PART NUMBER	QTY
1	Molded Body	141-201	1
2	Clamp	122-204	1
3	Screw, 8-32 x 1/2"	001-267	4

MOLDED IC UNIVERSAL HOLDER
141-200

WARRANTY

Beaverstate Dental warranties its product to be free of defects in material and workmanship for FIVE FULL YEARS from the date of purchase on all units. Auto-blocks and standard foot control (126-000) are covered by a LIFETIME warranty when factory installed as part of a complete dental system. Warranty is limited to repair or replacement by Beaverstate Dental. Products returned to the factory and determined to be defective will be repaired or replaced free of charge. The warranty does not cover light bulbs. Beaverstate Dental reserves the right to void all warranties if any product is installed by other than an authorized technician. Beaverstate's warranty does not cover damage to any surface finish, including but not limited to, discoloration or abrasion from cleaners, disinfectants or light sources. No claim for labor or consequential damages will be allowed. Return items must include a copy of the invoice or packing slip as proof of purchase.

Beaverstate Dental Inc.
115 S. Elliott Rd.
Newberg, OR 97132
800-237-2303
503-538-8756
503-538-2845 Fax
www.beaverstatedental.com