BEAVERSTATE DENTAL SYSTEMS

Service Manual

A-2500

2 HP Automatic Unit with

Manual Arm System

Rev 5 - 1-13-20

900-043M

Installation

1. Install the chair adapter as per instructions provided with the chair adapter.
2. Place the shipping carton in the desired location. Remove the unit with arm system and unit/light post (if ordered) from the shipping carton.

NOTE

If the unit/light post has a hole drilled in the side for the umbilical, orient the post so the hole is facing toward the foot of the chair.

3. Insert the unit/light post into the chair adapter hub as designated by label on light post which states "Adapter This Side." Level, then tighten the set screws to secure the post in place.
4. Slide the arm stop collar and washer down the post. Tighten the set screws to secure the stop collar at the desired height.
5. Slide the unit with arm system down the post until it rests on the stop collar and washer.

WARNING

The arm system is spring loaded. Before removing the safety tie strap, firmly grasp the flex arm and hold down.

6. Cut the safety tie strap and carefully release the arm system.
7. Rotate the flex arm in a counter-clockwise direction so that the umbilical tubings do not become crimped or twisted.
8. The flex arm rotational stop consists of a ¼ - 28 dog point set screw inserted in the end of the rigid arm. This set screw and end cap are shipped with the stop collar. The set screw will engage a slot in the knuckle, and should be inserted fully, then backed off one half turn. Lastly, install the endcap.
9. Feed the umbilical into the hole in the unit/light post, pulling it out through the bottom of the post.
10. Mount the utility center housing to the floor as per instructions in the Utility Center Template & Guide.
11. Install master valve assemblies, with filter and regulator, onto the manual shut-off valves. (Pressures are preset at the factory: 80 psi air, 40 psi water).
12. Feed the supply tubings from the umbilical through the 3/4" hole in the utility center housing. Screw in the spiral tubing to act as a strain relief.
13. Connect the supply tubings as shown in the Utility Center Template & Guide.
14. Place the non slip pad and tray, or tray with non-skid feet on the control head lid.

Final Adjustments

Check air pressure, adjust to 80 psi if necessary.
Check water pressure, adjust to 40 psi if necessary.
Test handpieces for proper function.
Test syringe for proper pressure and function.
Adjust flex arm tension, if necessary.

Operation

1. Turn on the master switch located on the right side of the faceplate.

2. The handpiece is automatically activated when lifted from the holder.

3. Depress the foot control to activate each handpiece. Pressure is shown on the gauge for the handpiece being used.

4. Individual handpiece pressure adjustments are located on the flow control block inside the control head. Access to the flow control is provided through the hole on the left side of the chassis. To adjust the pressure to each handpiece:
   a. Turn adjustment screw *clockwise* to decrease the handpiece pressure.
   b. Turn adjustment screw *counter-clockwise* to increase the handpiece pressure.

CAUTION

When adjusting the handpiece pressure, do not over-tighten the screws. Damage may result.

5. Handpiece coolant water can be turned on or off with the toggle switch located on the left side of the faceplate.

6. Water coolant flow adjustment is located to the right of the water coolant toggle switch.

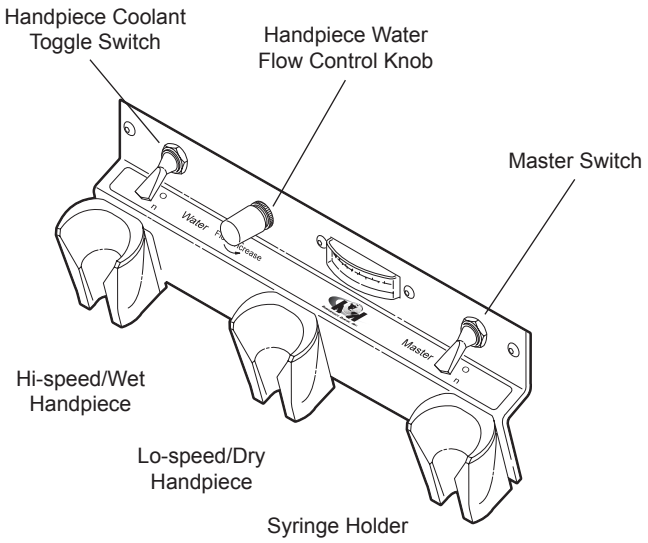

Control Panel A-2500

Troubleshooting

Symptom Handpiece lacks power.

Possible Causes

A. Improper supply pressure from compressor (80 psi).
B. Check handpiece pressure adjustment on unit.
C. Air filter may be plugged.
D. Pinched supply tubing.
E. Defective handpiece gasket at connection with tubing.
F. Defective handpiece.

Symptom Water coolant does not shut off when foot control is released.

Possible Causes

A. Adjust air pressure to 80 psi—water pressure to 40 psi.
B. Foot control is not exhausting.
C. Defective water relay valve.

Symptom More than one handpiece is operating.

Possible Causes

A. Handpiece is not all the way in the holder.
B. Improper adjustment on pilot valve in the handpiece holder.
C. Defective shuttle valve to gauge.

Symptom Insufficient water coolant.

Possible Causes

A. Adjust coolant flow valve.
B. Water filter may be plugged.
C. Handpiece may be plugged.
D. Pinched supply tubing.
E. Improper adjustment of water relay valve.

Symptom Water coolant is running from handpiece while in the holder.

Possible Causes

A. Water pressure too high.
B. Air pressure too low.
C. Handpiece holder out of adjustment.

Symptom Water coolant is running continuously.

Possible Causes

A. Purge switch is on (on applicable systems).
B. Water pressure to high.
C. Handpiece holder out of adjustment.
D. Defective water relay valve.

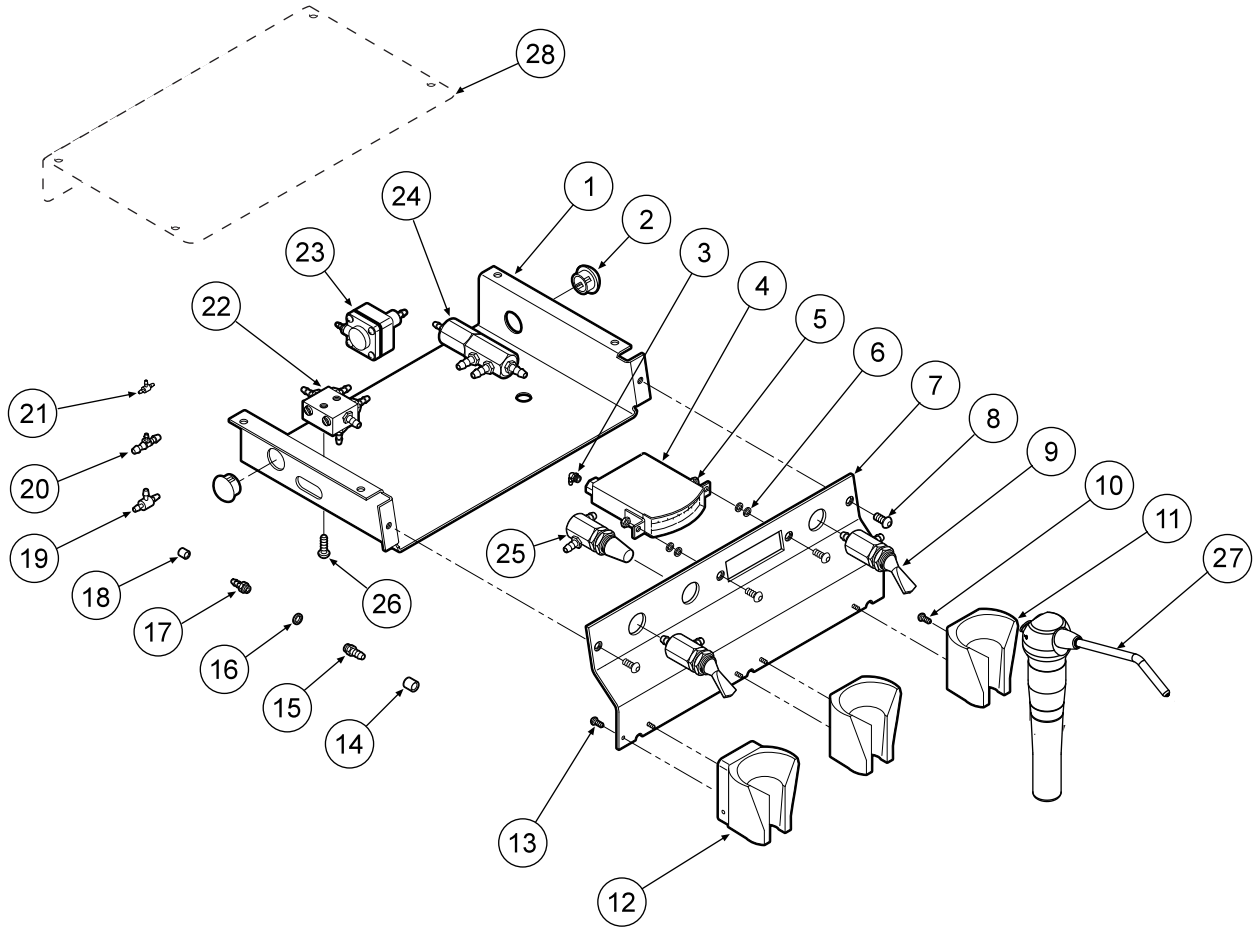

ITEM	PART DESCRIPTION	PART NUMBER	QTY
1	Chassis	101-014	1
2	Plug, 1/2"	010-013	2
3	Plastic Elbow, 1/16".	022-039	1
4	Gauge	026-003	1
5	Nut, 6-32"	002-004	2
6	Washer, Flat, #6	003-032	4
7	Faceplate	101-015	1
8	Screw, 6-32 x 1/4"	001-133	4
9	3-Way Toggle Valve	120-002	2
10	Screw, 4" x 3/8"	001-135	2

ITEM	PART DESCRIPTION	PART NUMBER	QTY
11	Universal Handpiece Holder	141-006	2
12	Automatic Handpiece Holder	122-049	1
13	Screw, 4" x 3/4"	001-063	2
14	Ferrule, 1/4"	117-008	
15	Barb, 10-32 x 1/16"	022-010	
16	Plastic Washer, 1/4"	003-001	1
17	Barb, 10-32 x 1/16"	022-009	1
18	Ferrule, 1/8"	117-007	1
19	Shuttle Valve	014-012	1

TEM	PART DESCRIPTION	PART NUMBER	QTY
20	Plastic Tee, 1/8"	022-049	1
21	Plastic Tee, 1/16"	022-033	1
22	Syringe Block	113-021	1
23	Water Relay	123-000	1
24	Routing Valve	014-007	1
25	Needle Flow Valve	121-000	1
26	Screw, 10-32 x 3/8"	001-072	1
27	Syringe	113-400	1
28	Optional Control Head Cover	101-016	1

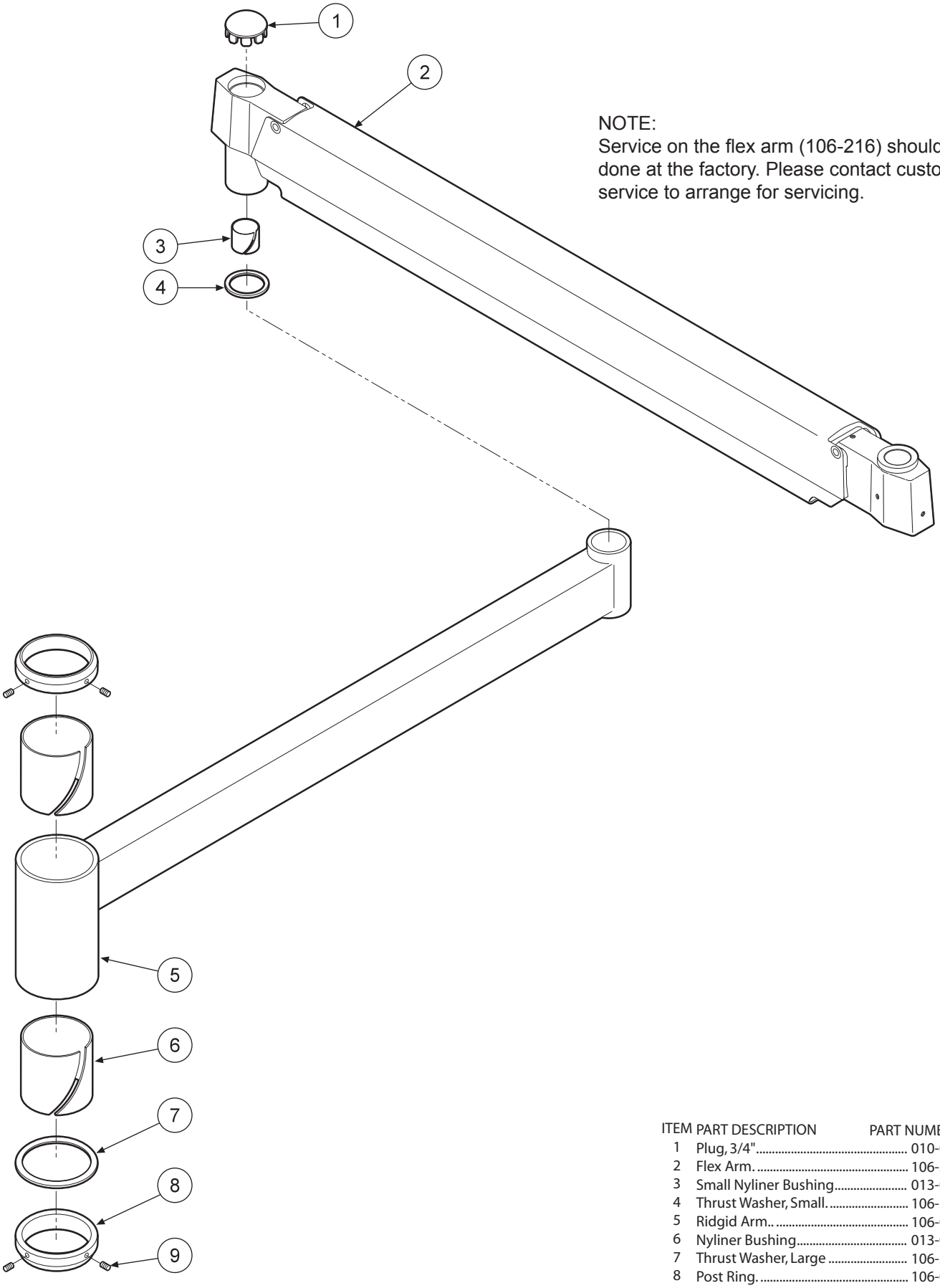

NOTE:
Service on the flex arm (106-216) should be done at the factory. Please contact customer service to arrange for servicing.

ITEM	PART DESCRIPTION	PART NUMBER	QTY
1	Plug, 3/4"	010-005	1
2	Flex Arm.	106-216	1
3	Small Nyliner Bushing	013-012	1
4	Thrust Washer, Small.	106-333	1
5	Ridgid Arm..	106-031	1
6	Nyliner Bushing	013-007	2
7	Thrust Washer, Large	106-334	1
8	Post Ring.	106-028	2
9	Set Screw, 8-32 x 3/16"	005-021	4

FLEX ARM SYSTEM, 2" POST MOUNT
106-220

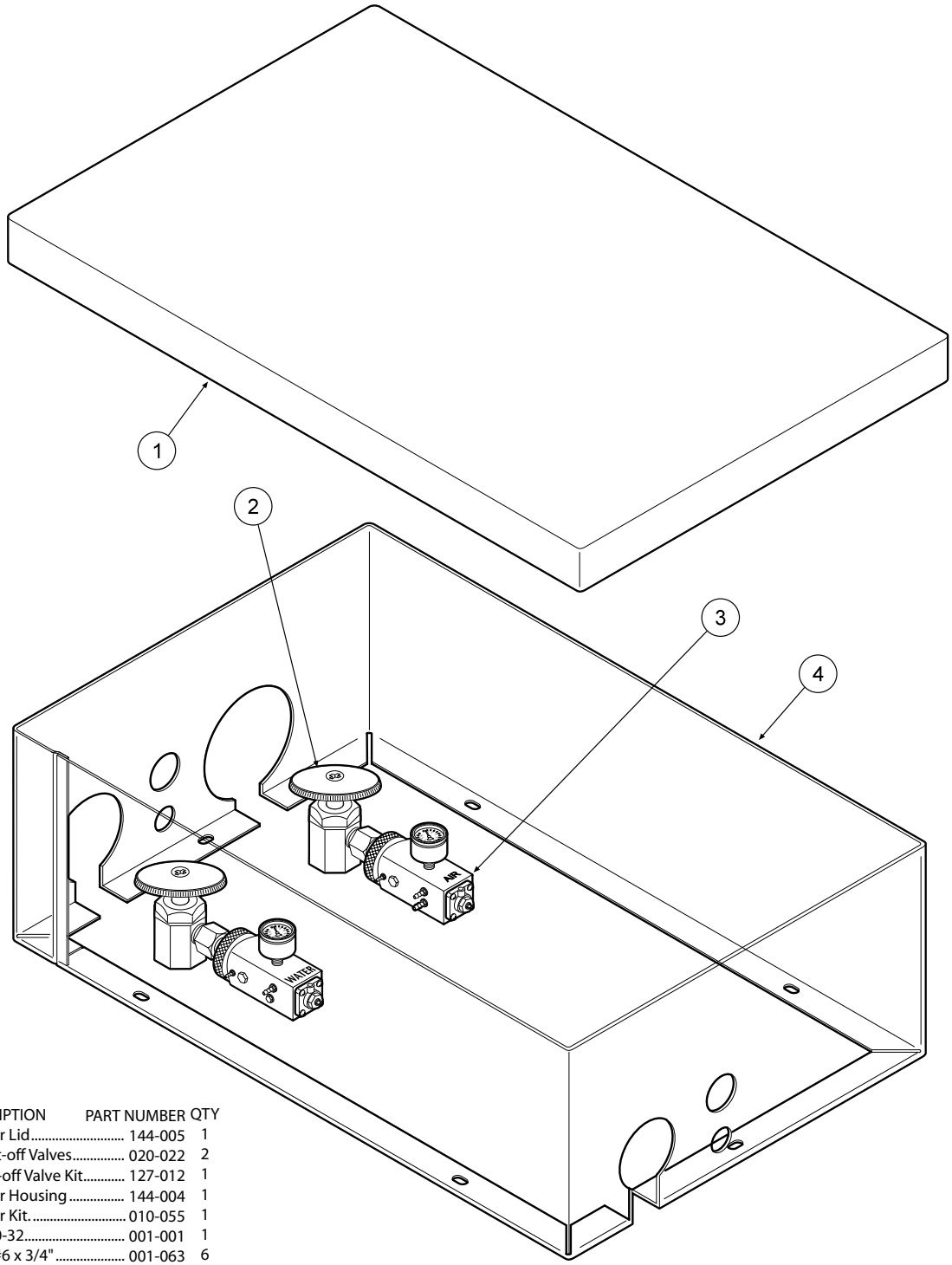

ITEM	PART DESCRIPTION	PART NUMBER	QTY
1	Utility Center Lid	144-005	1
2	Manual Shut-off Valves	020-022	2
3	Master Shut-off Valve Kit	127-012	1
4	Utility Center Housing	144-004	1
	Utility Center Kit.	010-055	1
	Plug ,10-32	001-001	1
	Screw, #6 x 3/4"	001-063	6
	Plastic Washer, 1/4"	003-001	2
	Plug, 3/4"	010-005	2
	Plug, 1-3/8"	010-008	1
	Plug, 1/2"	010-013	1
	Plug, 1-1/2"	010-015	1
	Plug, 2-1/4"	010-017	1
	Plug, 13/16"	010-016	2
	Barb, 10-32 x 1/16"	022-009	1
	Barb, 10-32 x 1/8"	022-010	1
	Ferrule, 1/8"	117-007	4

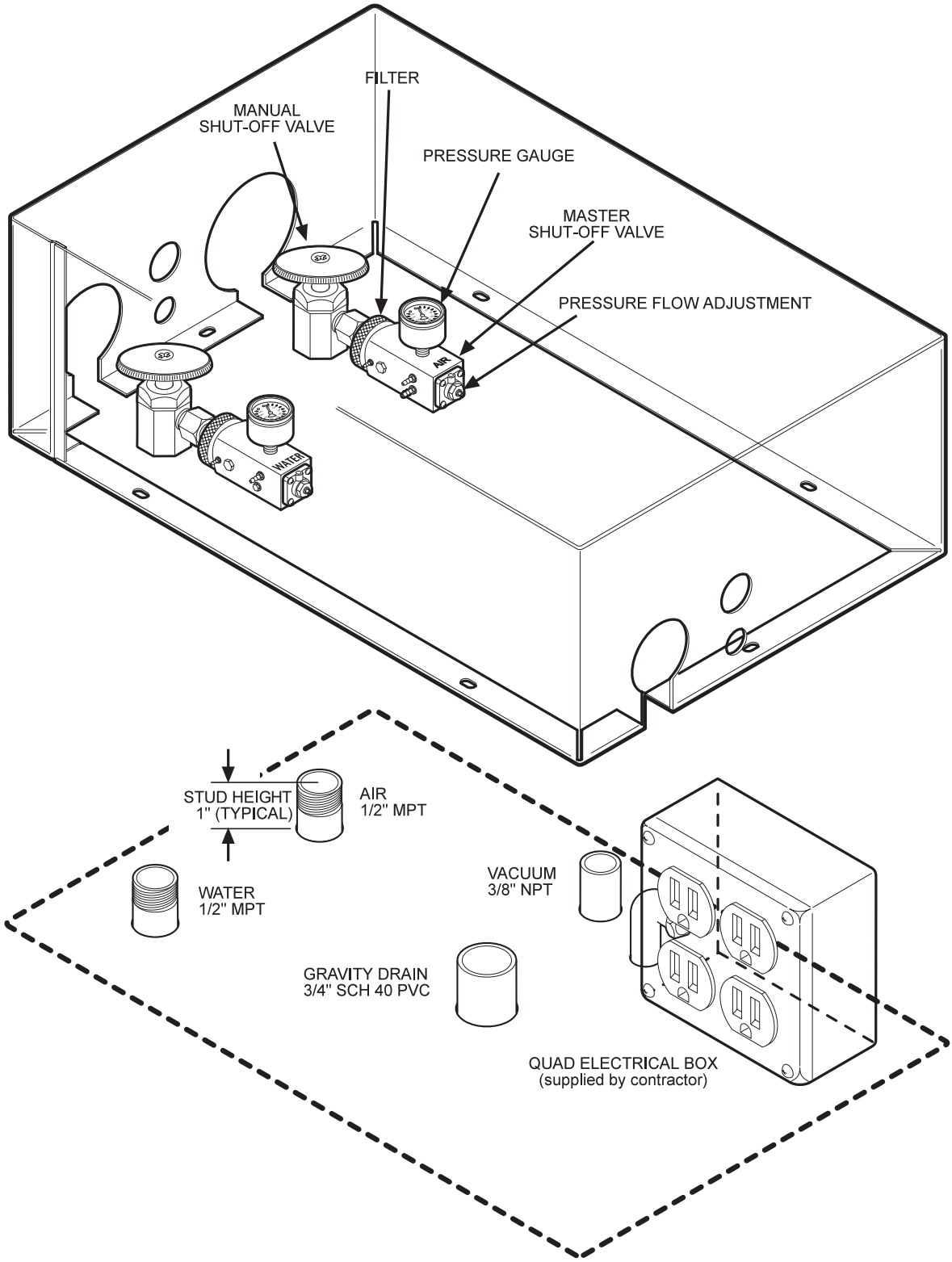

UTILITY CENTER INSTALLATION

144-018

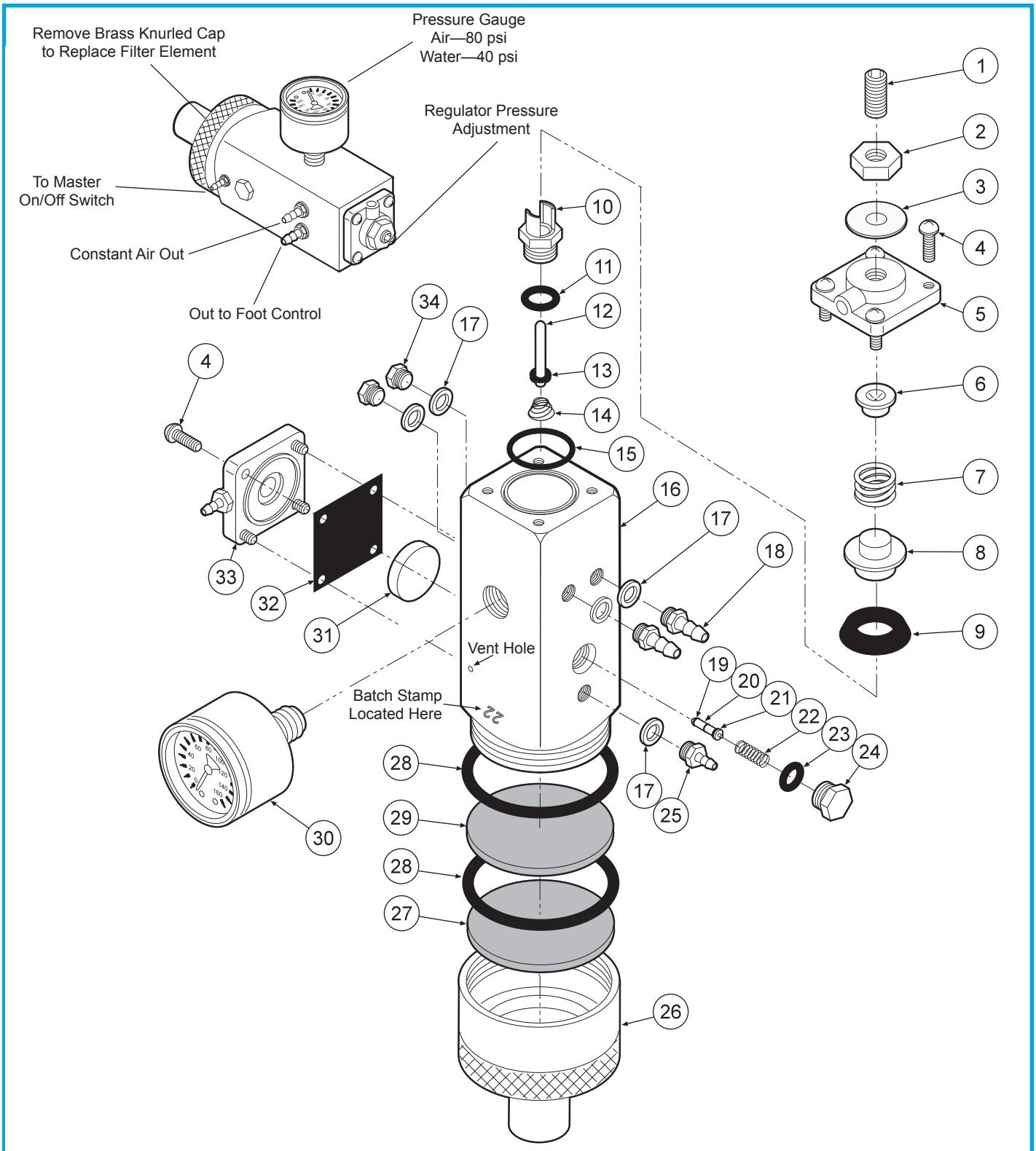

ITEM	PART DESCRIPTION	PART NUMBER	QTY
1	Set Screw, 1/4-20 x 5/8"	005-024	1
2	Jam Nut, 1/4-20	002-006	1
3	Washer	003-015	1
4	Screw, 6-32 x 3/8"	001-041	8
5	Cap	127-033	1
6	Spring Seat	127-043	1
7	Spring	008-008	2
8	Cup Seat	127-044	1
9	Cup Seal	017-200	4
10	Seat	127-026	3
11	O-Ring, 008	017-008	2
12	Stem	127-024	1
13	O-Ring, 004	017-104	1
14	Spring	008-028	1
15	O-Ring	017-018	1
16	Body	127-040	1
17	Plastic Washer, 1/4"	003-001	5
18	Barb, 10-32 x 1/8"	022-010	2
19	O-Ring, 001	017-501	2
20	Stem	127-045	1
21	O-Ring, 003	017-103	1
22	Spring	008-040	1
23	O-Ring, 007	017-007	1
24	Plug	020-026	1
25	Barb, 10-32 x 1/16"	022-009	1
26	Cap Inlet	127-041	1
27	Filter Element, 100 Micron	119-005	1
28	O-Ring, 018	017-022	2
29	Filter Element, 35 Micron	119-004	1
30	Gauge	026-001	1
31	Piston	123-014	1
32	Gasket	127-031	1
33	Cap	123-030	1
34	Plug	001-001	2

MASTER VALVE
127-010-AIR

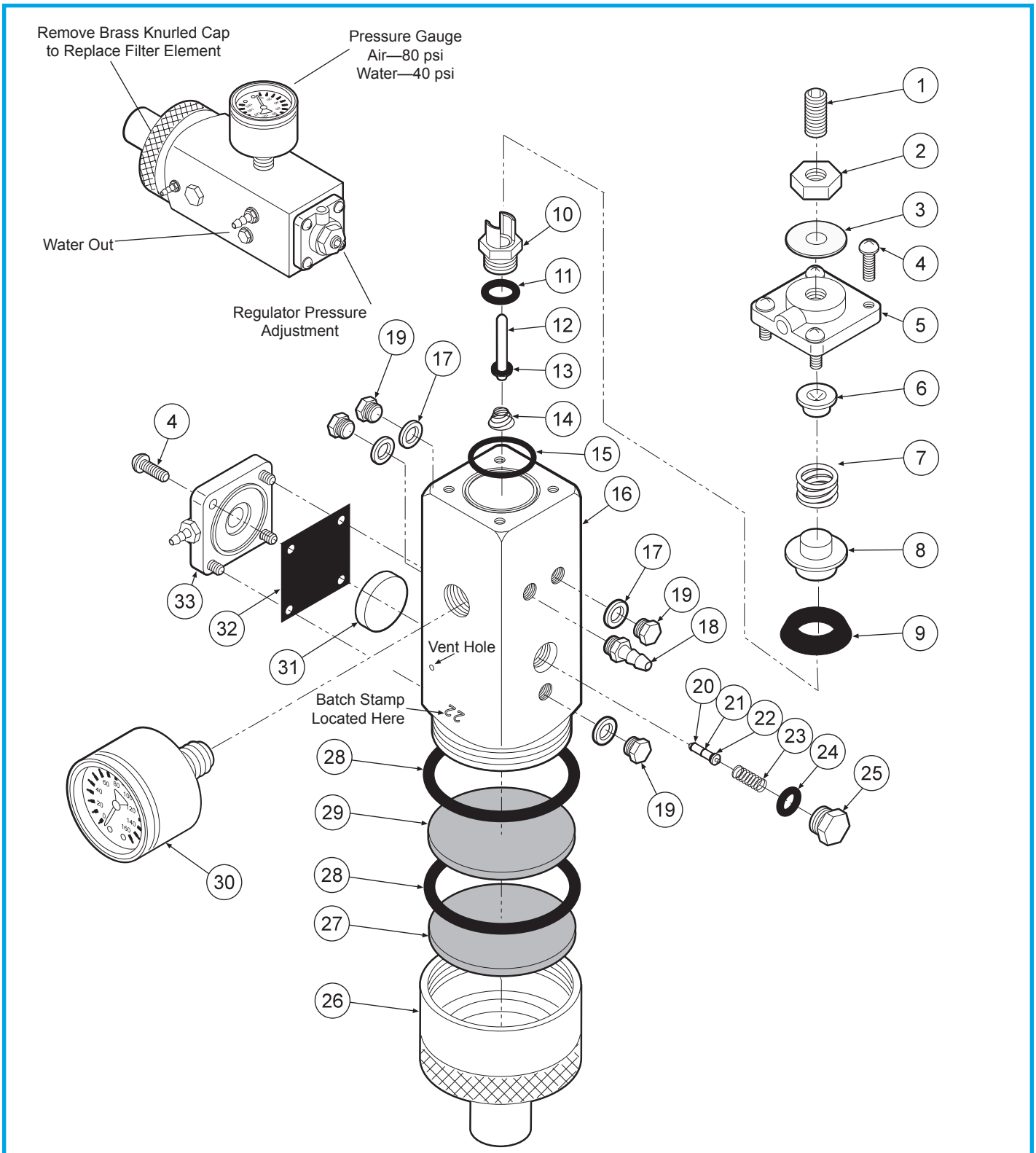

ITEM	PART DESCRIPTION	PART NUMBER	QTY
1	Set Screw, 1/4"-20 x 5/8"	005-024	1
2	Jam Nut, 1/4"-20	002-006	1
3	Washer	003-015	1
4	Screw, 6-32 x 3/8"	001-041	8
5	Cap	127-023	1
6	Spring Seat	127-043	1
7	Spring	008-008	1
8	Cup Seat	127-044	1
9	Cup Seal	017-200	1
10	Seat	127-026	1
11	O-Ring, 008	017-008	1
12	Stem	127-024	1
13	O-Ring, 004	017-104	1
14	Spring	008-028	1
15	O-Ring	017-018	1
16	Body	127-040	1
17	Plastic Washer, 1/4"	003-001	1
18	Barb, 10-32 x 1/8"	022-010	1
19	Plug	001-001	4
20	O-Ring, 001	017-501	2
21	Stem	127-045	1
22	O-Ring, 003	017-103	1
23	Spring	008-040	1
24	O-Ring, 007	017-007	1
25	Plug	020-026	1
26	Cap Inlet	127-041	1
27	Filter Element, 100 Micron	119-005	1
28	O-Ring, 018	017-022	2
29	Filter Element, 35 Micron	119-004	1
30	Gauge	126-001	1
31	Piston	123-014	1
32	Gasket	127-031	1
33	Cap	123-012	1

MASTER VALVE
127-010-WATER

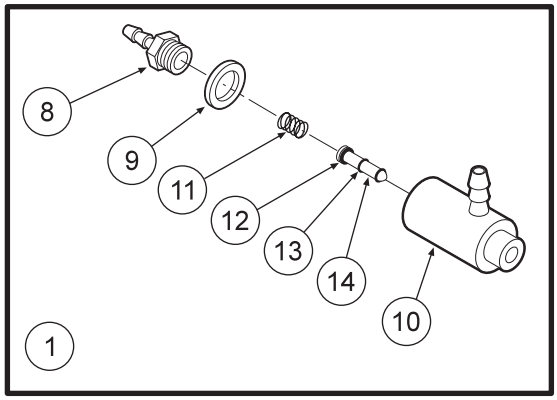

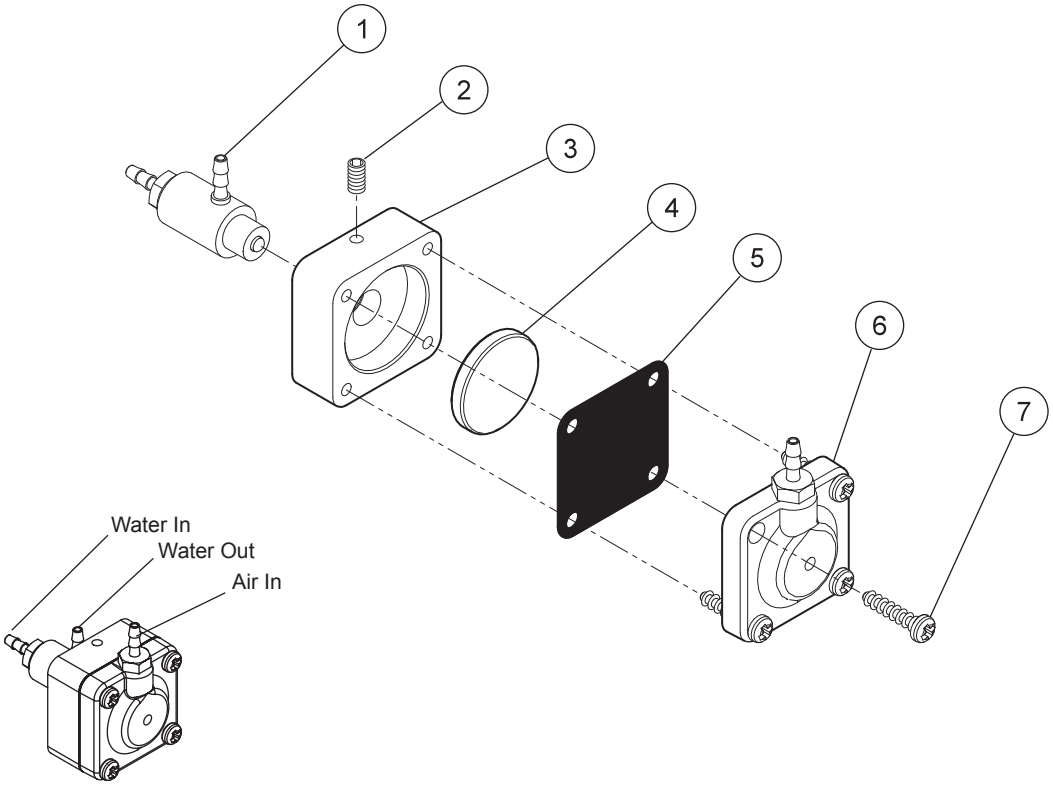

Water Relay Valve 123-000

ITEM	PART DESCRIPTION	PART NUMBER	QTY
1	Cartridge Body Assembly	123-018	1
2	Set Screw, 4-40 x 5/8"	005-028	1
3	Body	123-013	1
4	Piston	123-014	1
5	Diaphragm	127-031	1
6	Cap	123-012	1
7	Screw, #6 x 1/2"	001-267	4
8	Barb, 10-32 x 1/16"	022-009	1
9	Plastic Washer, 1/4"	003-001	1
10	Valve Body	123-017	1
11	Spring	008-011	1
12	O-Ring, 002	017-502	1
13	O-Ring, 001	017-501	2
14	Stem	123-015	1

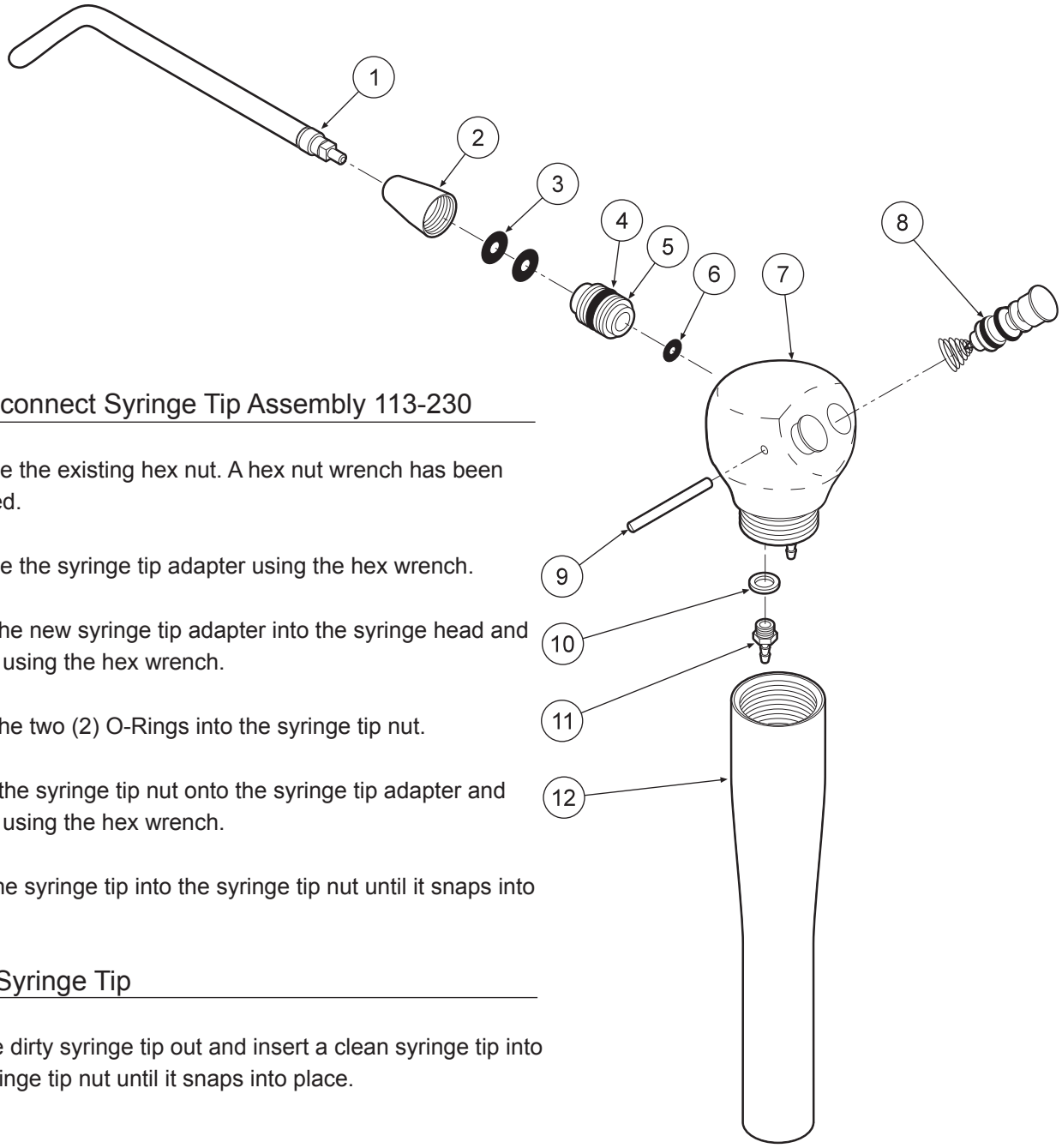

Quick-disconnect Syringe Tip Assembly 113-230

1. Remove the existing hex nut. A hex nut wrench has been provided.

2. Remove the syringe tip adapter using the hex wrench.

3. Insert the new syringe tip adapter into the syringe head and tighten using the hex wrench.

4. Place the two (2) O-Rings into the syringe tip nut.

5. Screw the syringe tip nut onto the syringe tip adapter and tighten using the hex wrench.

6. Push the syringe tip into the syringe tip nut until it snaps into place.

Replace Syringe Tip

1. Pull the dirty syringe tip out and insert a clean syringe tip into the syringe tip nut until it snaps into place.

ITEM	PART DESCRIPTION	PART NUMBER	QTY
1	Syringe Tip	113-030	1
2	Syringe Tip Nut	113-402	1
3	O-Ring, 006	017-006	2
4	O-Ring, 228-040	017-023	1
5	Syringe Tip Adapter	113-227	1
6	O-Ring, 003	017-003	1
7	Syringe Head	113-405	1
8	Syringe Button Repair Kit	113-403	2
9	Pin, Syringe Cartridge	113-008	1
10	Plastic Washer, 8-32	003-030	2
11	Barb, 8-32 x 1/16''	022-040	2
12	Syringe Handle	113-236	1

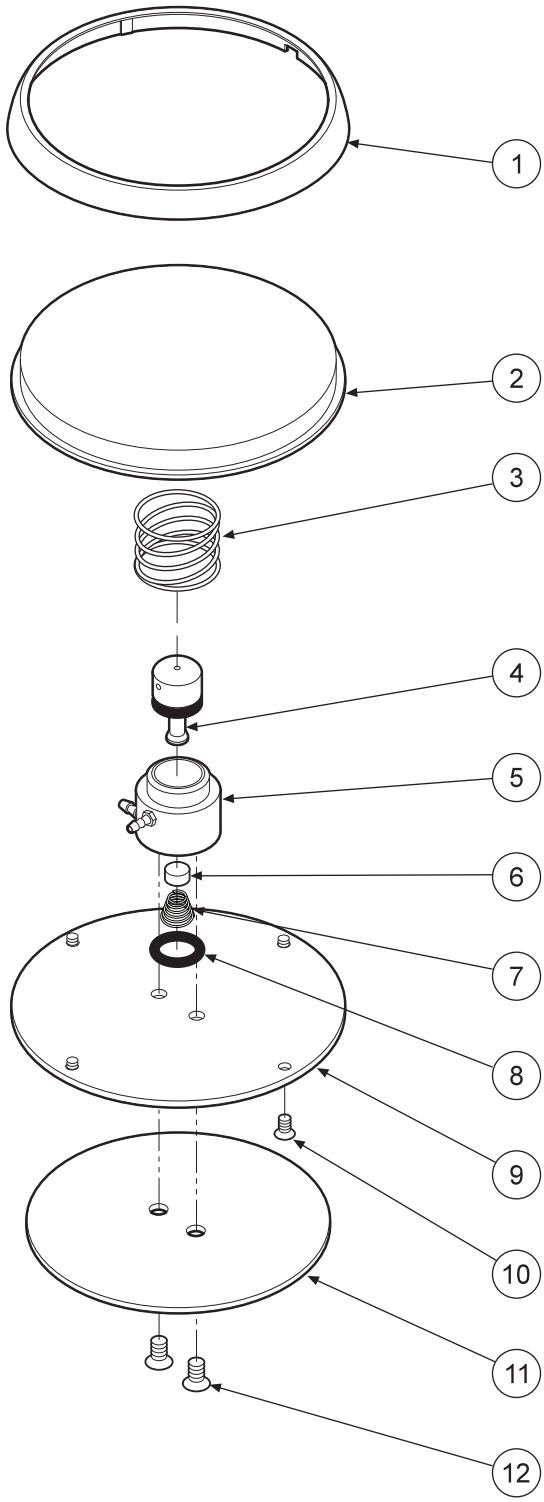

ITEM	PART DESCRIPTION	PART NUMBER	QTY
1	Ring	126-202	1
2	Cover	126-201	1
3	Spring	008-005	1
4	Stem (Includes 017-012 o-ring)	126-005	1
5	Body	126-004	1
6	Poppet	126-006	1
7	Spring	008-006	1
8	O-Ring, 013	017-013	1
9	Baseplate	126-003	1
10	Screw, 4-40 x 1/4"	001-005	4
11	Rubber Pad	126-007	1
12	Screw, 6-32 x 1/4"	001-004	2

FOOT CONTROL
126-200

BEAVERSTATE DENTAL SYSTEMS

2 Handpiece Manual Control
A-2500

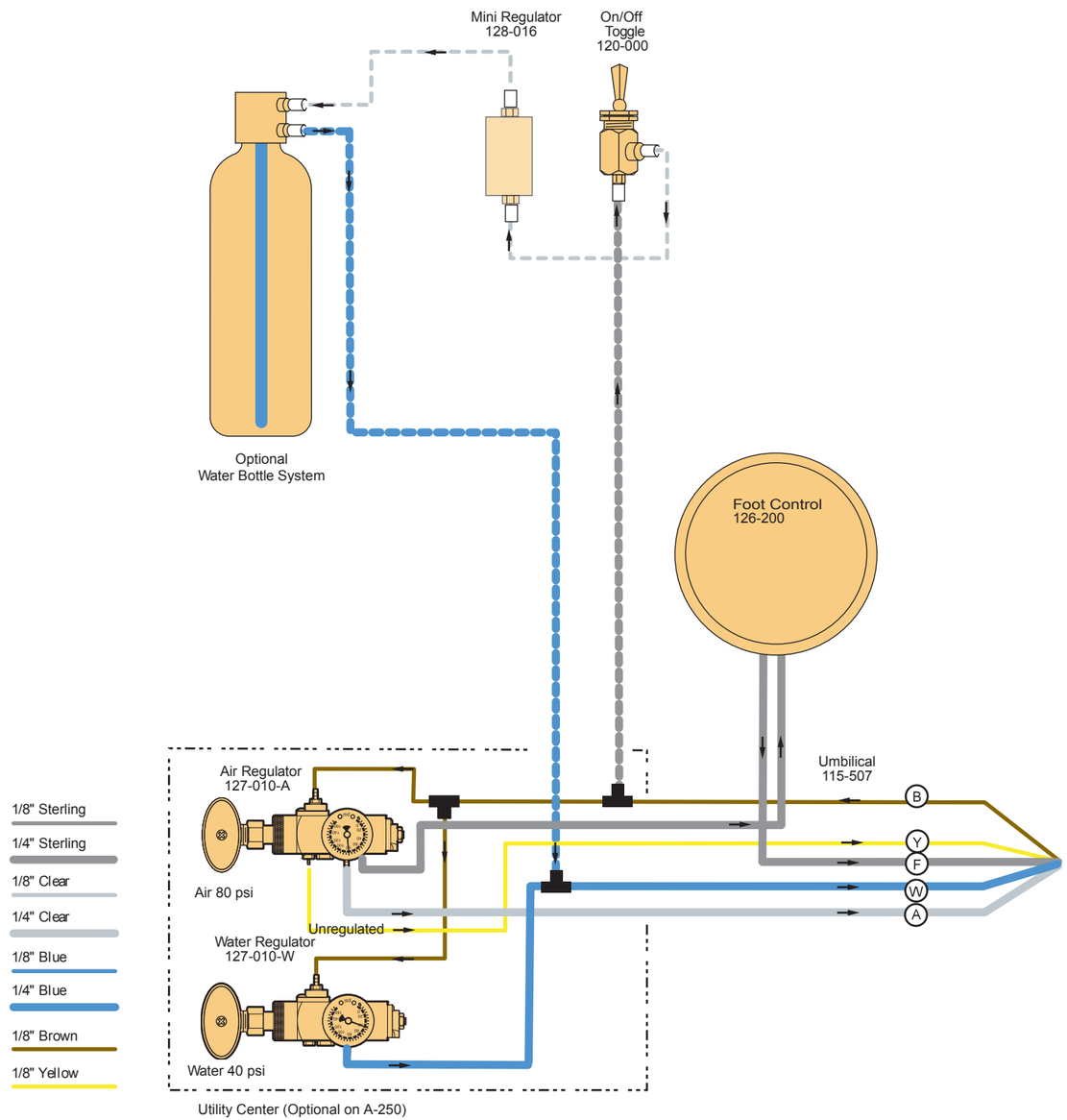

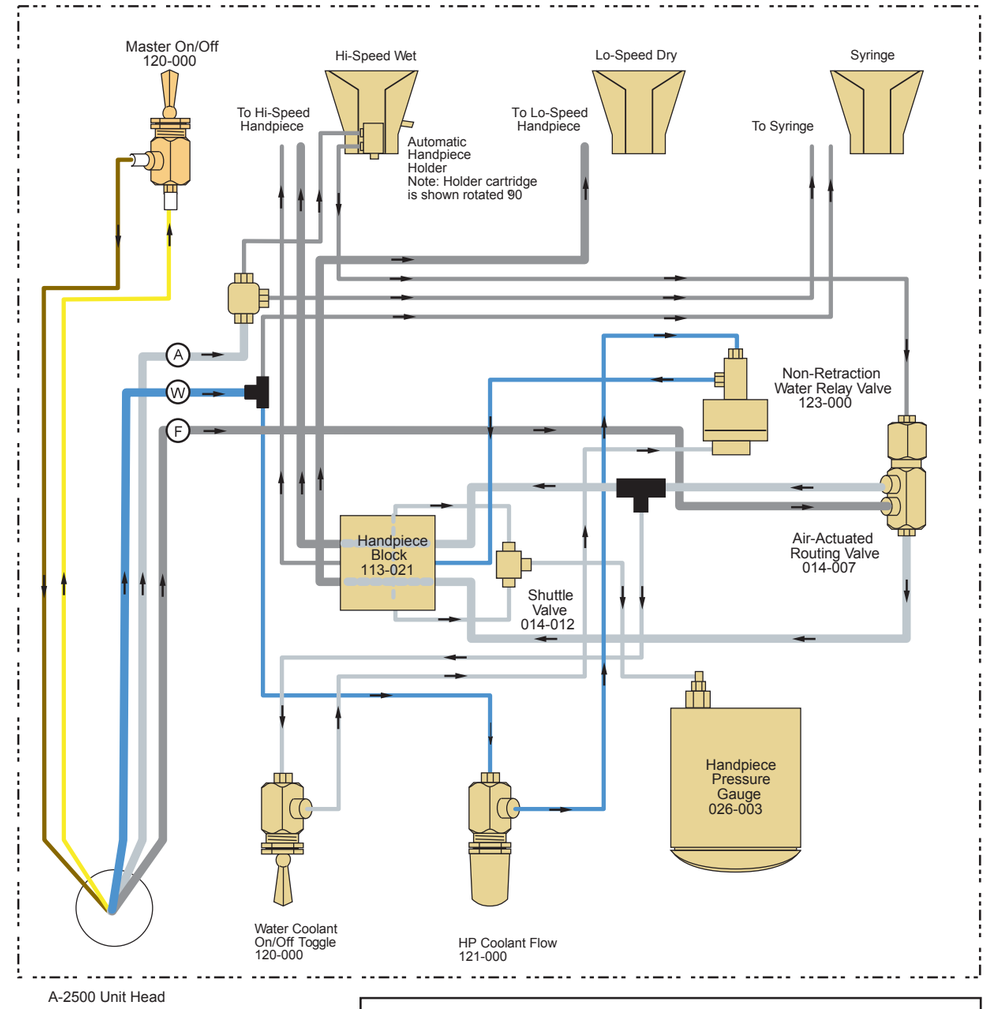

Junction Box

Circled letters indicate connection at Junction Box

- (A) 1/4" Clear - Constant Air In
- (B) 1/8" Brown - On/Off (flow out) to M.V.
- (F) 1/4" Gray - In From Foot Control
- (W) 1/4" Blue - Water In
- (Y) 1/8" Yellow - On/Off (flow In) from M.

WARRANTY

BDS warranties its product to be free of defects in material and workmanship for SEVEN FULL YEARS from the date of purchase on all units. Auto-blocks and standard foot controls are covered by a LIFETIME warranty when factory installed as part of a complete dental system. Upholstery has a TWO YEAR warrany and does not cover normal wear, stains, cuts or tears. Our LED lights have a FIVE year Warranty and our halogen light has a ONE year Warranty. Operatory chair motors feature a TEN year warranty. All warranty is limited to repair or replacement by BDS. Products returned to the factory and determined to be defective will be repaired or replaced free of charge at discretion of BDS. The warranty does not cover light bulbs, electrical components and trimmed or installed tubing. BDS reserves the right to void all warranties if any product is installed by other than an authorized technician. BDS' warranty does not cover damage to any surface finish, including but not limited to, discoloration or abrasion from cleaners, disinfectants or light sources. No claim for labor or consequential damages will be allowed. Return items must include a copy of the invoice or packing slip as proof of purchase.

Beaverstate Dental Inc.
115 S. Elliott Rd.
Newberg, OR 97132
800-237-2303
503-538-8756
503-538-2845 Fax
www.beaverstatedental.com